L195 Series

All Stainless Steel Spherical Switches

L195

Key Features:

- High-Temperature and High-Pressure performance
- Excellent in water, oils
- Selectable to Normally-Open or Normally-Closed by inverting the float
- 50 VA SPST switch (standard)

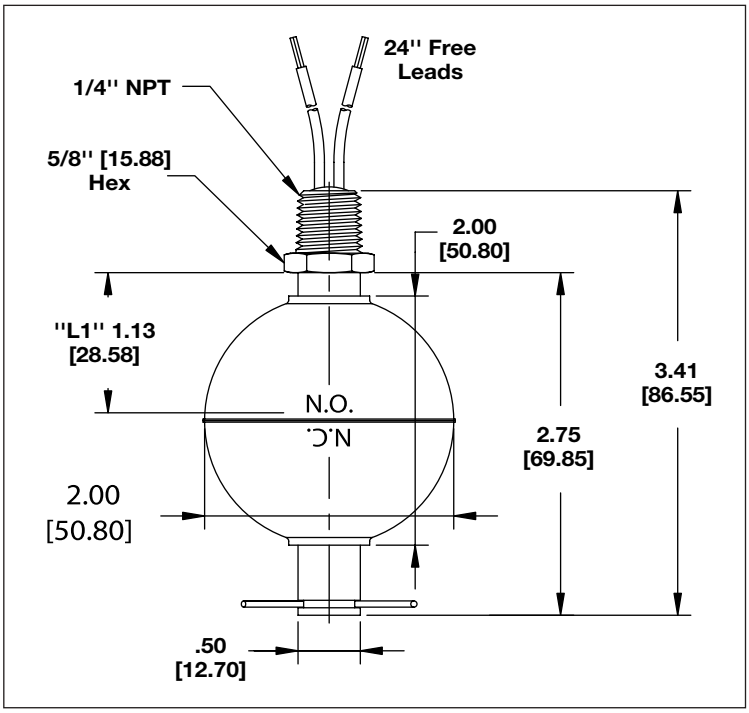

Intermediate & Large-Sized Switches

Series	Mounting	Stem/Float Materials	SG	Temperature	Pressure	P/N
L195	¼" NPT	SS/SS	.75	-40° to +300° F	750 PSIG	L195-0208-0803

SG refers to recommended minimum liquid specific gravity