Innovative Solutions

L180/L190 Series

Intermediate and Large-Sized Buna-N Float Switches

Key Features:

- Excellent in oils and water
- Broad media compatibility
- Series L190 for high-viscosity liquids
- Selectable to Normally-Open or Normally-Closed by inverting the float
- 50 VA SPST switch (standard)

L180

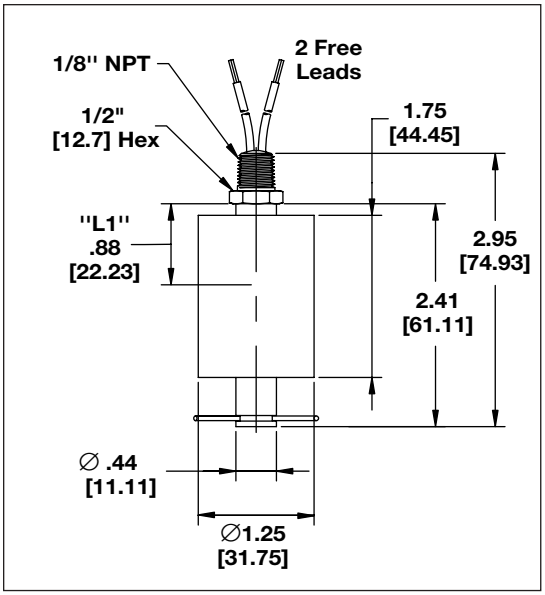

L180

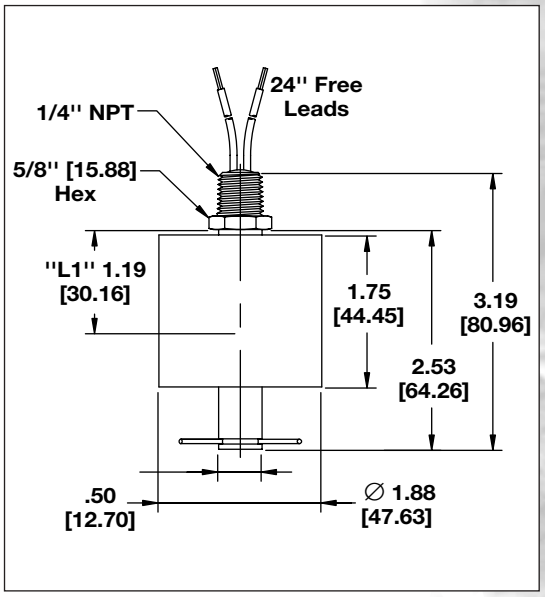

L190

Intermediate & Large-Sized Switches

Series	Mounting	Stem/Float Materials	Specific Gravity	Temperature	Pressure	Part Number
L180	⅛" NPT	Brass/Buna	.75	-40° to +180° F	150 PSIG	L180-0101-2003
L180	⅛" NPT	SS/Buna	.75	-40° to +180° F	150 PSIG	L180-0108-2003
L190	¼" NPT	Brass/Buna	.65	-40° to +180° F	150 PSIG	L190-0201-2003
L190	¼" NPT	SS/Buna	.65	-40° to +180° F	150 PSIG	L190-0208-2003

SG refers to recommended minimum liquid specific gravity