# Single-Stage Switches: **Horizontal Mount**

Innovative Solutions

FM APPROVED

## L071/L071HP Series

The L071 & L071HP level switches are horizontally mounted float switches to monitor high and low liquid levels with a 15 amp SPDT snap acting switch. With pressure body made of 316 stainless steel, the high pressure design features a titanium float rated to 5000 psig.

### Key Features:

- Available to 5000 psig
- All stainless steel
- May be used Normally-Open or Normally-Closed
- Interface capabilities
- UL & FM approved
- Operates on falling or rising level
- 15-amp microswitch

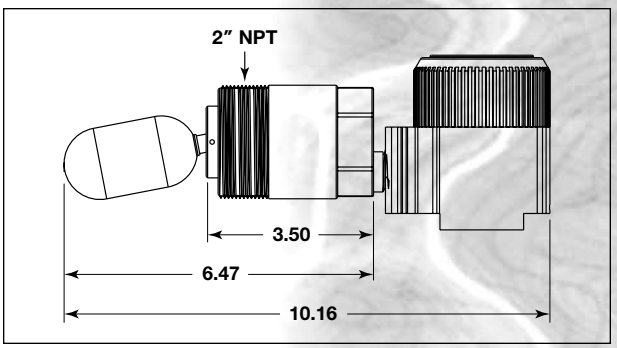


L071

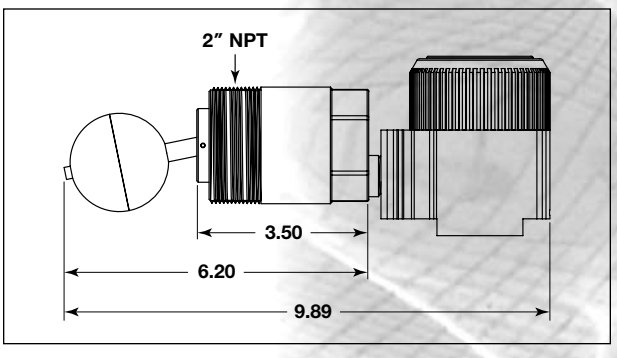


L071HP

### Product Specifications:

Process Connection: 1½", 2" NPT Standard (other connections available)

Electrical Connection: ½" NPT (aluminum junction box)

Electrical Rating: SPDT, 15 Amp (125, 250, 480 VAC)
1/8 HP 125 VAC, 1/4 HP 250 VAC
1/2 A, 125 VDC, 1/4 A 250 VDC

| Series | Mounting | Materials | SG | Temperature | Maximum Pressure | P/N |
|---|---|---|---|---|---|---|
| L071 | 1½" NPT | 316 Stainless steel | .40 | -40° to +300° F | 1500 psig | L070-0808-3011 |
| | 2" NPT | | | | 1500 psig | L070-0908-3011 |
| | 1½" 150# Flange (L071 only) | | | | 175 psig | L070-7208-3011 |
| | 2" 150# Flange | | | | 175 psig | L070-7308-3011 |
| | 2½" 150# Flange | | | | 175 psig | L070-7408-3011 |
| | 3" 150# Flange | | | | 175 psig | L070-7508-3011 |
| | 2" 300# Flange | | | | 455 psig | L070-8408-3011 |
| | 2½" 300# Flange | | | | 455 psig | L070-8508-3011 |
| | 3" 300# Flange | | | | 455 psig | L070-8608-3011 |
| L071HP | 2" NPT | Stainless steel Ti Float | .40 | -40° to +300° F | 5000 psig | L071HP-0908-1311 |

L071 also available in other flange sizes and mounting. Both series are available with optional hastelloy float and body material. Consult factory for details.

UL & CUL, FM-EP* Class I, Div. 1, Groups A, B, C & D
Class II & III Groups E, F & G for hazardous locations

Innovative Solutions • 60 Great Hill Road • Naugatuck, CT 06770 • Tel: 203-729-6434 • Fax: 203-729-6696 • www.innovativesensing.com