Single-Stage Switches: **Horizontal Mount**

Innovative Solutions

FM APPROVED

L070/L070HP Series

The L070 & L070HP level switches are horizontally mounted float switches to monitor high and low liquid levels. The L070/L070HP operates by the actuation of a hermetically sealed reed switch caused by the encapsulated magnet within the float rising and falling with the tank level. Made in all 316 stainless steel, the L070 series is rated to 1500 psig with NPT connection. The L070HP high pressure design features a titanium float rated to 5000 psig.

Key Features:

- Available to 5000 psig
- All stainless steel
- May be used Normally-Open or Normally-Closed
- Interface capabilities
- Reliable reed switch action
- UL, FM, CSA approved
- Operates on falling or rising level
- Available with on-board 5 amp DPDT relay

Product Specifications:

Process Connection: 1½", 2" NPT Standard (other connections available)
Electrical Connection: ½" NPT (optional junction box for L070 Series)
Electrical Rating: 100 VA SPST (240V AC/DC maximum resistive)

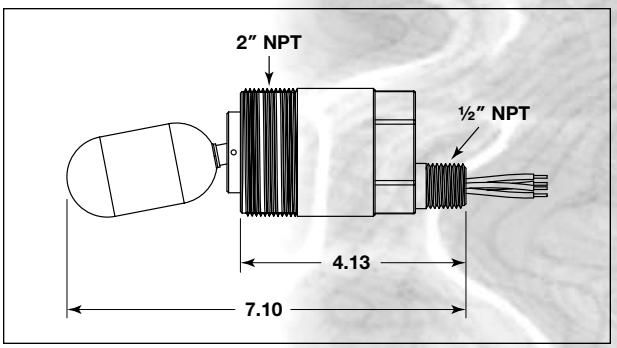

L070

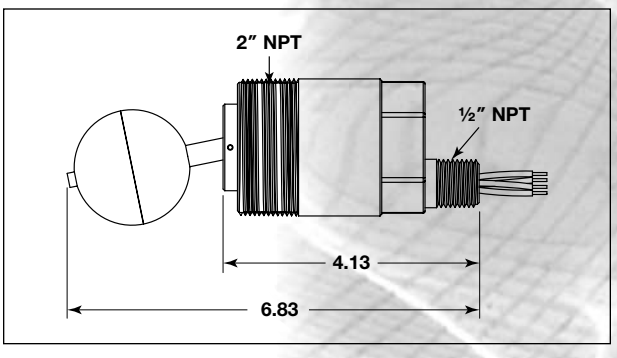

L070HP

Series	Mounting	Materials	SG	Temperature	Maximum Pressure	P/N
L070	1½" NPT	316 Stainless steel	.40	-40° to +300° F	1500 psig	L070-0808-3004
	2" NPT				1500 psig	L070-0908-3004
	2" 150# Flange				175 psig	L070-7308-3004
	2½" 150# Flange				175 psig	L070-7408-3004
	3" 150# Flange				175 psig	L070-7508-3004
	2" 300# Flange				455 psig	L070-8408-3004
	2½" 300# Flange				455 psig	L070-8508-3004
	3" 300# Flange				455 psig	L070-8608-3004
L070HP	2" NPT	Stainless steel Ti Float	.40	-40° to +300° F	5000 psig	L071HP-0908-1304

L070 also available in other flange sizes and mounting. Both series are available with optional hastelloy float and body material. Consult factory for details.

UL & CUL, FM-EP* Class I, Div. 1, Groups A, B, C & D
Class II & III Groups E, F & G for hazardous locations