Innovative Solutions

L007 Series

Compact, Low-Cost Switches

L007
316 Stainless Steel

L007
Plastic Internal Mount

L007
Plastic External Mount

L007TT
Plastic External Mount

Key Features:

- No-leak construction
- Ideal for small tanks
- Side-wall mounting: internal or external
- Broad media compatibility
- Operates on falling or rising level
- Extreme temperature/pressure model (316 SS)
- Floats can either rise or lower with the liquid level depending on the mounting position. In Normally-Open (shown in graphics) the float lowers with the level. In Normally-Closed, the float rises with the liquid level. Rotating the switch 180˚ will change the switch operation to Normally-Open or Normally-Closed
- 50 VA switch (standard)

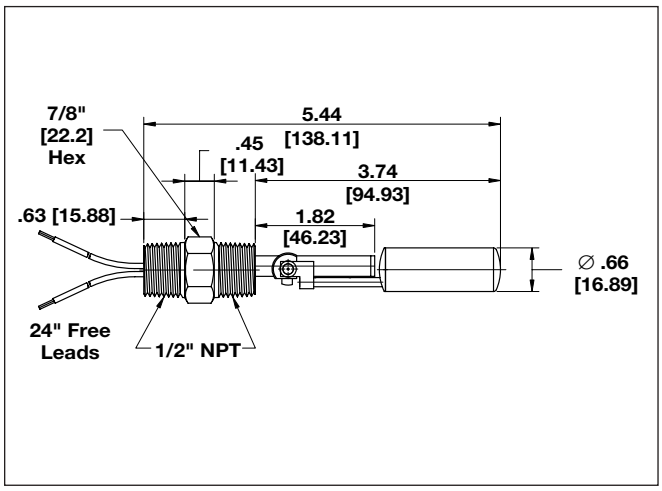

L007 in 316 Stainless Steel

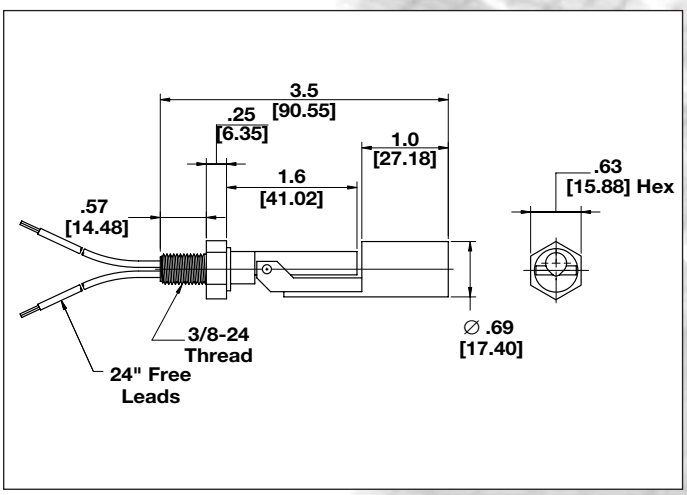

L007 in Plastic (Internal Mount)

Innovative Solutions

L007 Series

Compact, Low-Cost Switches

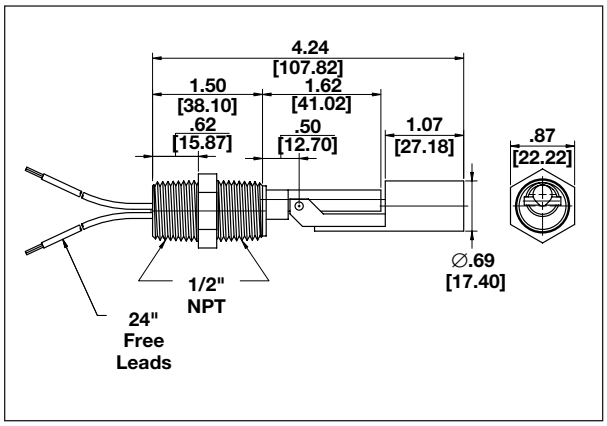

L007 in Plastic (External Mount)

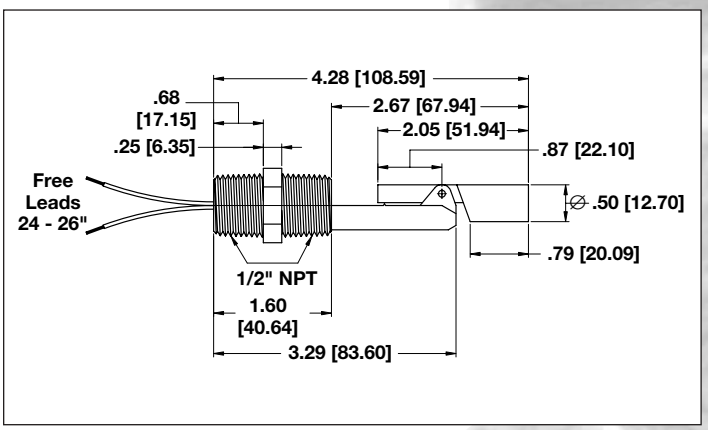

L007TT in Plastic External Mount

Intermediate & Large-Sized Switches

Series	Mounting	Materials	SG	Temperature	Pressure	P/N
L007 **Compact, Low-Cost Switches**	½" NPT	PVDF	.80	-40° to +250° F	100 PSIG	L007-0404-0403
	½" NPT	PP	.55	-40° to +150° F	100 PSIG	L007-0402-0203
	½" NPT	PVC	.65	-40° to +140° F	100 PSIG	L007-0405-0503
	½" NPT	SS	.80	-40° to +300° F	300 PSIG	L007-0408-0803
	⅜"-24	PVDF	.80	-40° to +250° F	100 PSIG	L007-1804-0403
	⅜"-24	PP	.55	-40° to +150° F	100 PSIG	L007-1802-0203
	⅜"-24	PVC	.65	-40° to +140° F	100 PSIG	L007-1805-0503
	⅜"-24	SS	.80	-40° to +300° F	300 PSIG	L007-1808-0803
	½" NPT	Polysulfone	.65	-40° to +225° F	100 PSIG	L007-0422-2203
	½" NPT	Nylon	.60	-40° to +250° F	100 PSIG	L007-0418-1803
	⅜"-24	Polysulfone	.65	-40° to +225° F	100 PSIG	L007-1822-2203
	⅜"-24	Nylon	.60	-40° to +250° F	100 PSIG	L007-1818-1803
	⅝"-11	Polypropylene	.55	-40° to +150° F	100 PSIG	L007-2202-0203
	⅝"-11	Nylon	.60	-40° to +250° F	100 PSIG	L007-2218-1803
	⅝"-11	Polysulfone	.65	-40° to +225° F	100 PSIG	L007-2222-2203

SG refers to recommended minimum liquid specific gravity

Miniature Float Side-Mount Switches

Series	Mounting	Materials	SG	Temperature	Pressure	P/N
L007TT **Miniature, Float, Side-Mount**	½" NPT	Polypropylene	.65	-40° to +150° F	150 PSIG	L007T-0402-0203
	½" NPT	Polysulfone	.65	-40° to +225° F	150 PSIG	L007T-0422-2203
	⅝"-11	Polypropylene	.65	-40° to +150° F	150 PSIG	L007T-2202-0203
	⅝"-11	Polysulfone	.65	-40° to +225° F	150 PSIG	L007T-2222-2203