Flow Switches: **In-Line Flow Switch**

Innovative Solutions

F003 Series

The series F003 is a low cost flow switch installed in line with the fluid movement for monitoring flow rates from .5 to 50 GPM. The compact and durable design allows for ease of installation and many years of trouble free service. The removable bonnet assembly provides easy cleaning without removal from the process. The F003 is available in a bronze body with a Teflon® shuttle mechanism. Optional materials and configurations are available upon request.

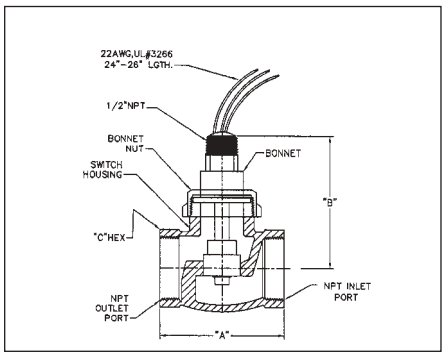

Model	Port Size NPT	"A" Inch	"B" Inch	"C" Hex Inch	Max. Flow
F003-05	¾"	3"	3"	1-13/32"	12 GPM (US)
F003-06	1"	3-¼"	3"	1-25/32"	15 GPM (US)
F003-09	2"	5-3/8"	4"	3-3/32"	50 GPM (US)

Features:

- In-line mounting
- Horizontal or vertical mount
- Low pressure drop
- SPDT switch type
- Single fixed set point
- Easy access to internal shuttle
- Fixed set-points to 50 GPM

Electrical:

- Output: SPDT 20 and 100 VA

Environmental:

- Process Temperature:
  Bronze/Teflon:
  -20° to +300° F (-28° to +148° C)
- Process Pressure:
  400 psig @ +100° F
  (27 bar @ +37° C)

Applications:

- Lubricant Fow Monitoring
- Coolant Flow Monitoring
- Chillers
- Cooling Towers