DemiMag DL Series

Electromagnetic Flow Tubes

EMCO's DemiMag DL Electromagnetic Flow Meter System consists of the patented DemiMag Flow Tube and 4411e Transmitter. DemiMags can meter expensive raw materials or additives with greater efficiency, thus improving product quality.

Features

- Totally encapsulated sensor components
- No liner; no meter failure due to a defective liner
- Low conductivity media > 0.08 µS / cm
- Patented AC coil excitation (high coil current and high pulsation frequency)
- Low flow range capability, down to 1.5 gpm (350 lph)
- Option for quick disconnect process connections
- Fast time constant of 0.03 seconds
- Internal grounding electrodes
- For use in explosive atmospheres
- High signal-to-noise ratio for immunity to media noise

The DemiMag DL flow tube.

EMCO DemiMag DL flow tubes are sized from 3/4" to 1½" (20mm to 40mm), all with ½" connectors. DemiMag flow tubes do not have a liner and therefore will never fail due to a defective liner.

Each sensor includes an exciter coil and reference coil. Voltage is generated in the flow tube by the media in accordance with Faraday's Law, from which volumetric flow is calculated.

Application Guide

Materials of Construction	Diameter		Maximum Temperature		Maximum Pressure	
	inches	mm	°F	°C	psi	bar
Kynar Flow Tubes	3/4 1 1½	20 25 40	250 70	120 20	40 150	3 10
316 Stainless Steel Flow Tubes	3/4 1 1½	20 25 40	300	150	150	10

Media Conductivity

Typical required conductivity: ≥ 5 µS/cm (5 micromhos/cm)

Low conductivity option: for conductivities > 0.08 or < 5 µS/cm use the UniMag pre-amplifier option

For deionized, distilled or demineralized water, consult EMCO.

Performance Specifications

Accuracy and Traceability	
Accuracy	±0.5% of rate for flows ≥ 1.0 fps (0.3 m/s) ±0.005 fps (± 0.0015 m/s) for flows < 1.0 fps (0.3 m/s)
Accuracy Notes	Accuracy is unaffected by electrode coatings such as sewage, grease, calcium carbonate, algae or similar.

1 For media such as ferric chloride, ferric sulfate (Odophos) or similar highly conductive media, flow meter performance can be adversely affected. Please consult EMCO for these types of applications.

DemiMag DL Flow Rates at 0.5% Accuracy

Line Size		Minimum Flow Velocity		Maximum Flow Velocity	
inches	mm	gpm	lph	gpm	lph
¾	20	1.50	350	42	10,300
1	25	2.50	540	74	16,000
1½	40	5.50	1380	280	41,000

Power Requirements for 4411e Flow Transmitter

Power Supply Options	120V, 60Hz 230V, 50Hz 120V, 50Hz
Analog Output	2 x 4-20 mA 2-wire system
Pulse Output	2-wire potential-free output

Physical Specifications

Materials of Construction	PVDF flow tubes; 316 Stainless Steel, Hastelloy B, Hastelloy C, Titanium or Tantalum Electrodes; Viton or Kalrez Seals
Process Connections	Flanged ANSI 150 RF Flanged ANSI 300 RF Flanged DIN/BS4504 PN10-40 Flanged JIS10krf Flanged BS/AS2129 Table D Flanged BS/AS2129 Table E Tri-Clamp Sanitary Ends DIN 11851 Sanitary Ends

Straight Run Piping Requirements

Piping	Upstream	Downstream
All piping configurations	5 D	2 D
Pump Upstream	20 D	5 D
Pump Downstream	10 D	5 D

D is equal to the internal diameter of the pipe

Other Installation Considerations

Mounting Recommendations

The DemiMag may be mounted into a pipeline in any attitude, taking note of the flow direction arrow on the flow tube. To obtain accurate measurement, the pipe must be completely full and air must not be entrained in the flow.

Straight Run Requirements

For particularly poor velocity profiles caused, for example, by upstream bends in two or more planes or partially open valves, the DemiMag requires a minimum of 10 pipe diameters of straight pipe upstream from the flow tube, and a minimum of 5 diameters downstream.

Non-Homogenous Media

For particularly non-homogenous slurries, pulps or pastes, the flow tube should be mounted in a vertical pipe to obtain the most even distribution of solids and fibers. There must be a minimum of 20 pipe diameters between any media mixing point and the DemiMag flow tube.

Partially Closed Valves

If the piping is horizontal and includes a partially closed valve, the valve should always be installed downstream of the DemiMag. This will allow the head pressure in the system to be adjusted, reducing the chance of air entrainment in the flow, and will prevent excessive irregular profiles forming upstream of the flow tube.

Dimensions and Weights

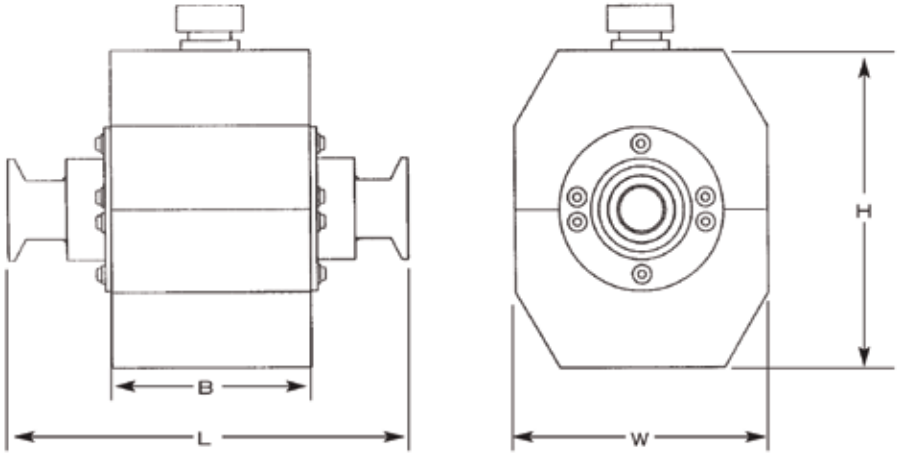

Part No.	Nominal Size	L	B	W	H	Weights (Flanged)	
						LB	KG
DL20	0.75″ (20 mm)	7.87″ (200 mm)	3.92″ (100 mm)	5.00″ (125 mm)	6.30″ (160 mm)	13	6
DL25	1″ (25 mm)	7.87″ (200 mm)	3.92″ (100 mm)	5.00″ (125 mm)	6.30″ (160 mm)	18	8
DL40	1.5″ (40 mm)	7.87″ (200 mm)	3.92″ (100 mm)	5.50″ (138 mm)	7.00″ (175 mm)	26	12

Wiring Diagram

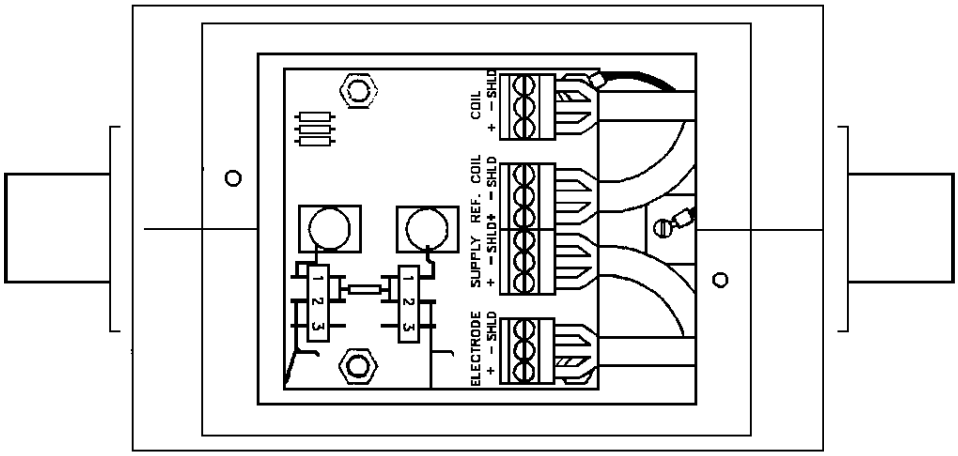

DemiMag Cable Connections			
Exciter Coils	Electrodes	Pre-Amp	Reference
Black to 4	Black to 24	Shield to 19	Black to 31
White to 5	White to 25	Black to 20	White to 32
Shield to 6	Shield to 26	White to 21	Shield to 19

Model and Suffix Codes

Category	Suffix Codes										
Model											
DemiMag DL Series Flow Tube	DL										
Nominal Size											
3/4 inch (20mm)		20									
1 inch (25mm)		25									
1½ inch (40mm)		40									
Flowtube Materials (Wetted)											
PVDF[1]			F								
Electrode and Grounding Materials (Wetted)											
316 Stainless Steel				T							
Hastelloy B				B							
Hastelloy C				C							
Titanium				I							
Tantalum				A							
Seal Materials (Wetted)											
Viton					V						
Kalrez					K						
Connection Materials (Wetted)											
316 Stainless Steel; Fixed Flanges						T					
PVDF[2]						F					
Process Connections											
Flanged ANSI 150 RF							A				
Flanged ANSI 300 RF							B				
Flanged DIN/BS4504 PN10-40							C				
Flanged JIS 10krf							D				
Flanged BS/AS2129 Table D							E				
Flanged BS/AS2129 Table E							F				
Tri-Clamp Sanitary Ends							I				
DIN 11851 Sanitary Ends							J				
Conductivity Rating											
Conductivity ≥ 5 µS/cm								N			
Conductivity ≥ 0.08 µS/cm, < 5 µS/cm, or Cables Longer than 15 feet (5m)[3]								A			

Category	Suffix Codes										
Enclosure											
Powder Coated Polyester Carbon Steel									W		
Polished Stainless Steel									L		
Cable Lengths											
15 Feet (5m) Cables										N	
Special Cable Length										E	
Coil Supply											
120V Coil Supply											A
230V Coil Supply											B
	DL	20	F	T	V	T	A	N	W	N	A

1 Mating connectors, seals and clamps not included.

2 Includes non-wetted rotary PVC or fixed PVDF flanges, depending on availability.

3 For deionized or demineralized water, consult EMCO.

EMCO Flow Systems is a division of Spirax Sarco, Inc. • 1150 Northpoint Blvd. • Blythewood, SC 29016

For information on EMCO flow products, contact:
EMCO Flow Systems • 2150 Miller Drive • Longmont, Colorado 80501
T: 800.356.9362 or 303.682.7060 • F: 303.682.7069 • sales@emcoflow.com • www.emcoflow.com

© Spirax Sarco, Inc. 2007
All rights reserved. Printed in U.S.A.
SL-DEMIMAGDL-350-02 1M 3/07

Viton® is a registered trademark of DuPont Dow Elastomers L. L. C.